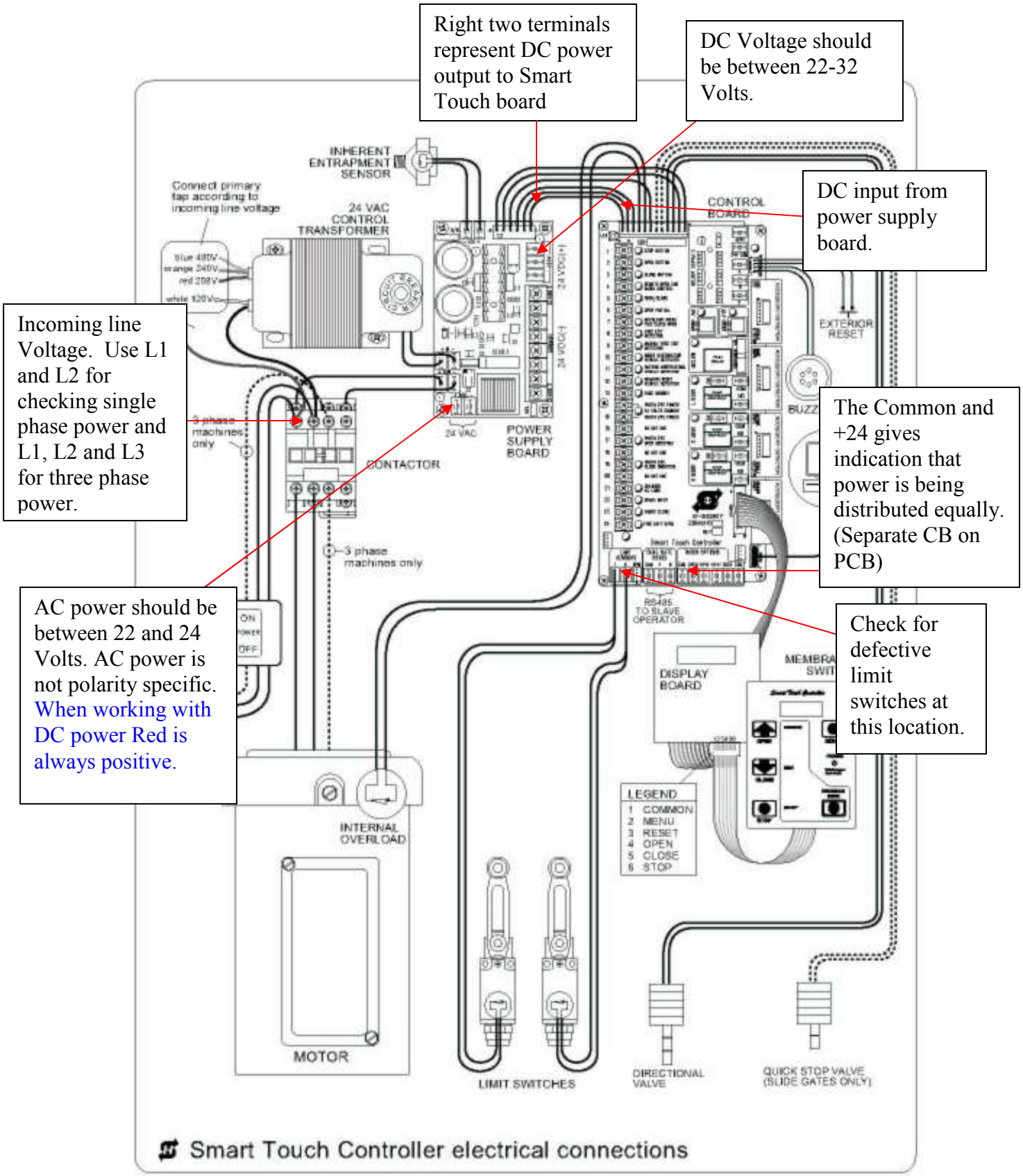

HySecurity Document D0037